Practice VI – Motor Position Control
Part A. PV Control Strategy

Abstract

The PID is a well-know controller, and it is composed by three terms. The proportional term is based on the present error, the integral term depends on past errors, and the derivative term is a prediction of future errors. However, its implementation may not lead to a good system response for real-world systems. The main reason is that measured signals often includes measurement noise. Differentiating a noisy measured signal (i.e. in the derivative control) can produce a control signal with high-frequency components that yields an undesirable response and, over time, may even damage the actuator (e.g. DC motor). For this reason, in this lab practice, a new control strategy, called PV control, is proposed to regulate the angular position of the QUBE-Servo 3. Hence, analysis of the control signal is performed and compared with the PD controller.

Topics Covered

- Servo position control
- Proportional-integral-derivative control
- Design control according to specifications

Prerequisites

- Hardware interfacing laboratory experiment
- Matlab® script of 2-D line plot

1. Introduction

The transfer function $P(s)$ that relates the angular position and the voltage of the system, $\Theta_m(s)/V_m(s)$ obtained in Lab Practice 3 is the following

$$P(s) \quad = \quad \frac{k_t}{J_{eq}R_m s^2 + k_t(k_m + \mu)s} \tag{1.1}$$

where k_t represents the torque constant, J_{eq} is the total moment of inertia acting on the motor shaft, R_m corresponds to the terminal resistance, k_m is the back-emf constant of the motor and μ is the coefficient of friction.

Thus, a proportional, integral, and derivative (PID) control can be implemented to regulate the angular position of the QUBE-Servo 3. Here, the control law can be mathematically expressed as

$$u(t) \quad = \quad K_p e(t) + K_i \int_0^t e(\tau)d\tau + K_d \frac{de(t)}{dt} \tag{1.2}$$

As it is described in Eq. 1.2, the proportional term is based on the present error, the integral term depends on past errors, and the derivative term is a prediction of future errors. Hence, the feedback control loop is shown in Fig. 1.1.

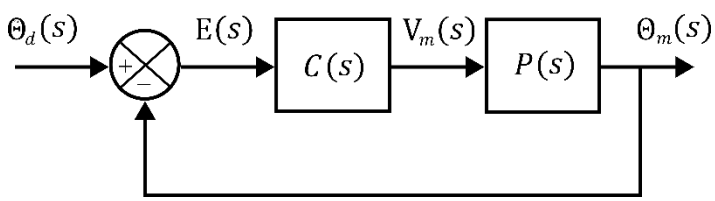

Fig. 1.1: Feedback control loop.

Based on Eq. 1.2 and Fig. 1.1, in Laplace Domain, the controller $C(s) = K_p + \frac{K_i}{s} + K_d s$, it means that the control action is a sum of three terms referred to as proportional (P), integral (I) and derivative (D) control gain. Henceforth, the block diagram of the feedback loop under the PID control strategy is presented in Fig. 1.2.

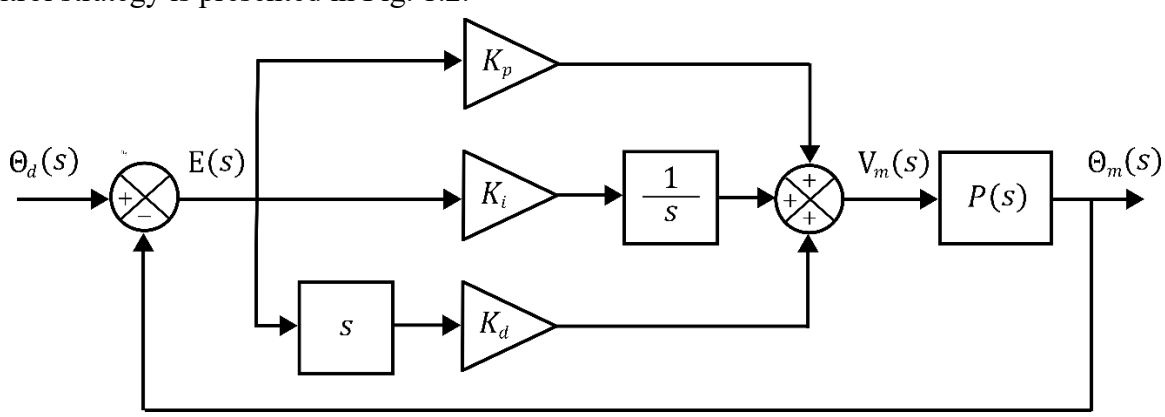

Fig. 1.2: Block diagram of PID control.

Remark 1: The PID controller described by Eq. 1.2 is an ideal PID controller. However, due to measurement noise, this may not lead to a good system response for real world system.

2. Development

D.1 In this Lab Practice, a new control strategy, called PV control, is proposed to regulate the angular position of the QUBE-Servo 3. Here, the integral term is not used, and the derivative of the error is replaced by the rate of the process variable. For this reason, it is also known as proportional plus velocity, Fig. 2.1

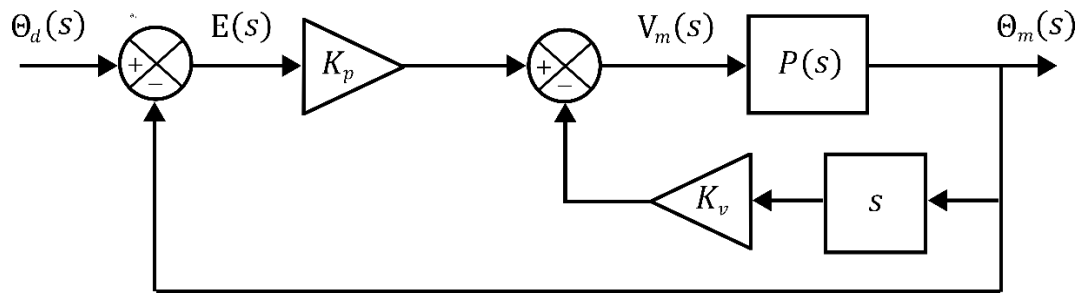

Fig. 2.1: Block diagram of PV control.

Similarly to Eq. 1.2, obtain the mathematical expression for the control law.

D.2 According to the models already designed in Hardware Interfacing and Filtering laboratory experiment, design a model of the proportional plus rate feedback control (D.1) given in Fig. 2.1 where a Signal Generator block is the servo command (i.e. desired position or setpoint), a square wave with an amplitude of 0.5 [rad] and at a frequency of 0.4 [Hz], as shown in Fig. 2.2.

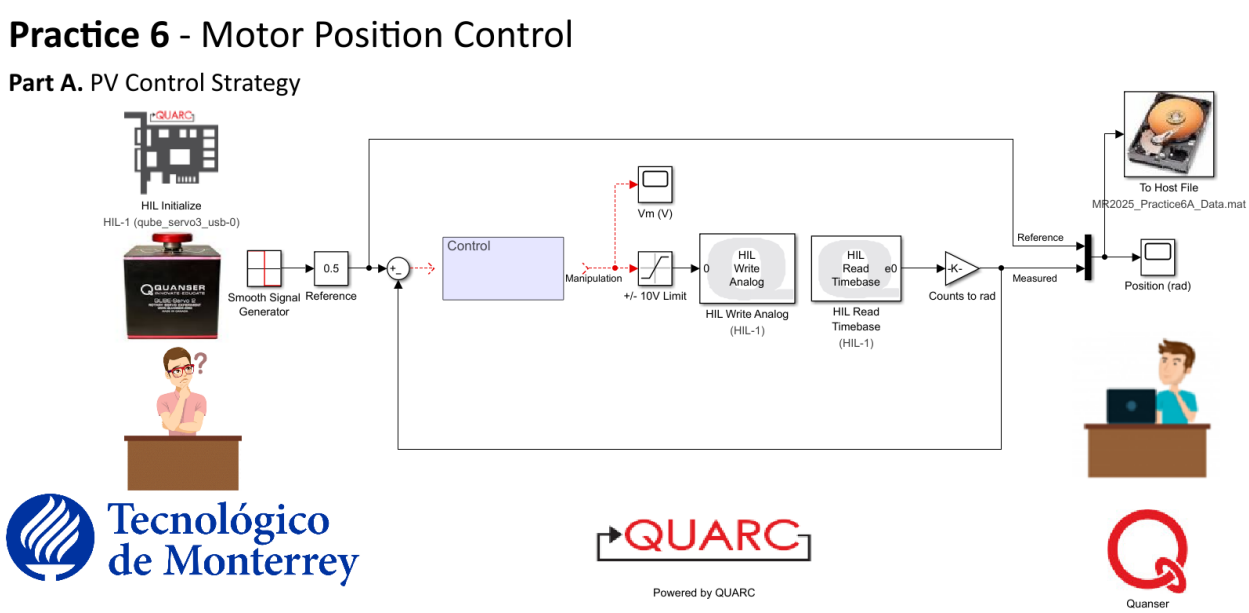

Fig. 2.2: Hardware interfacing and plus rate feedback position control of QUBE-Servo 3.

D.3 Set the proportional gain to $K_p = 2.5[\mathrm{V/rad}]$ and the derivative gain to $K_v = 0.05[\mathrm{V-s/rad}]$. Build and run the QUARC® controller with your QUBE-Servo 3 model. The scope response should be similar to Fig. 2.3.

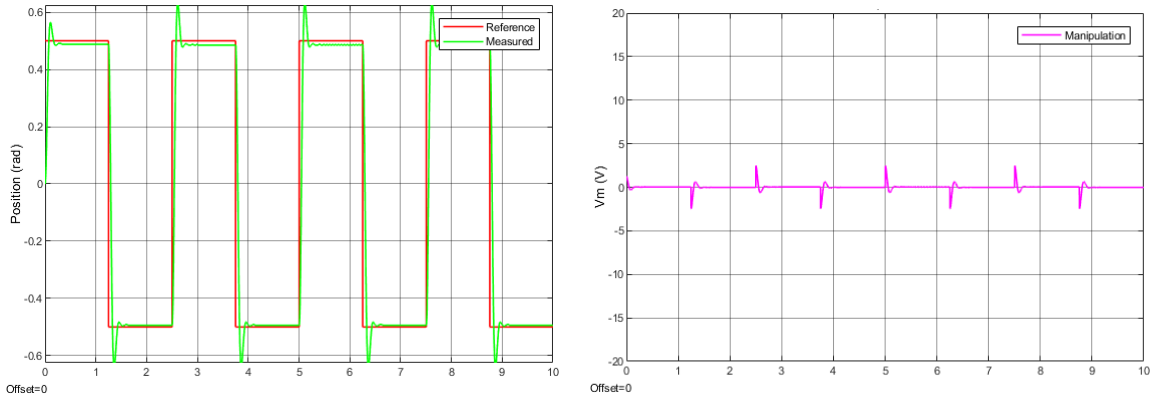

a) Motor position b) Applied voltage

Fig. 2.3: Servo control when input voltage to the motor and the QUBE-Servo 3 Model is applied.

D.4 To perform a qualitative analysis of the QUARC® controller given in D.2, run your model of the proportional plus rate feedback control considering the following parameters.

i. Vary $K_p = 1 - 4\ [\mathrm{V/rad}]$ and keep $K_v = 0\ [\mathrm{V-s/rad}]$. How does the proportional gain affect the servo position control response?
ii. Keep $K_p = 2.5\ [\mathrm{V/rad}]$ and vary $K_v = 0 - 0.15\ [\mathrm{V-s/rad}]$. How does the derivative gain affect the servo position control response?

D.5 Stop the QUARC® controller.

D.6 Based on Fig. 2.1, obtain the closed-loop transfer function $G(s)$ of the system, which relates the actual and the desired angular position, $\Theta_m(s)/\Theta_d(s)$.

D.7 Given the QUBE-Servo 3 closed-loop transfer function, find the mathematical expression for the proportional K_p and derivative K_v gains in terms of the system's parameters, the natural frequency and the damping factor of the system.

D.8 Based on Table 1.1 of Lab Practice 1, create a Matlab® Script to set the total moment of inertia acting on the motor shaft J_{eq} and the system parameters used in the QUBE-Servo 3 Model.

D.9 According to the QUBE-Servo 3 model parameters, which are the values of the proportional K_p and derivative K_v gains of the controller to exhibit an Overshoot of 2.5 % and a Peak Time of 0.15 [sec] when the input is applied?

Hint: Add the code lines to the Matlab® Script developed in D.8 to compute the proportional K_p and derivative K_v gains that satisfy the system requirements. Show the mathematical procedure.

D.10 Run the controller with the designed K_p and K_v gains on the QUBE-Servo 3. Attach the position response as well as the motor voltage used.

D.11 Based on D.10, measure the Overshoot and Peak Time of the QUBE-Servo 3 response. Do they match the desired percent Overshoot and Peak Time specifications required in D.9 without saturating the motor (going beyond ±10 V)?

D.12 If your response did not match the Overshoot and Peak Time specification, try tuning your control gains until your response does satisfy them. Attach the resulting Matlab® figure, resulting measurements, and comment on how you could modify your controller to arrive at those results.

D.13 By considering the computed gains, regulate the angular position of the QUBE-Servo 3 with a PD control ($K_p = K_p$ and $K_d = K_v$). Hence, the derivative of the error is now considered, Fig. 2.4

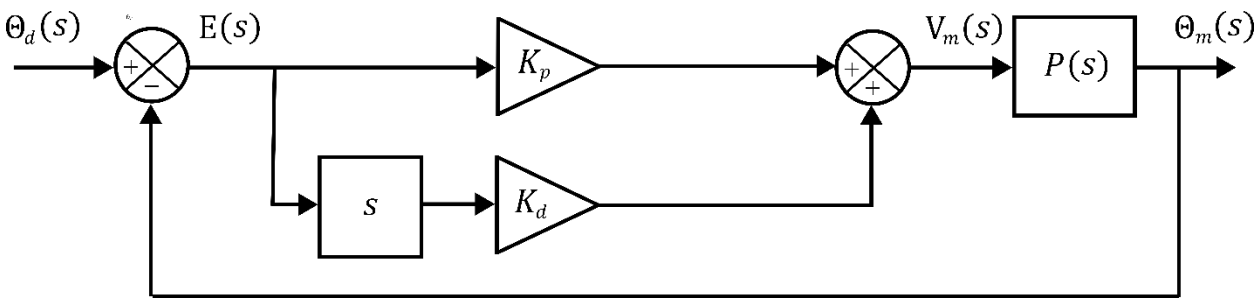

Fig. 2.4: Block diagram of PD control.

What could you observe when a PD controller is implemented?

D.14 Using your PV controller, could you modify your Simulink model to set the reference by reading the angle position of a second QUBE-Servo 3? Please, add your Simulink model.

D.15 Stop the QUARC® controller and power off the QUBE-Servo 3.

3. Report

R.1 Based on D.1, obtain the mathematical expression for the control law, $u(t)$.

R.2 According to D.2 and D.3, show the angle position and the input voltage applied to the motor when the proportional gain $K_p = 2.5[\mathrm{V/rad}]$ and the derivative gain $K_v = 0.05[\mathrm{V-s/rad}]$ are set. The designed model of the proportional plus rate feedback control for the QUBE-Servo 3 must be added.

R.3 Based on D.4, show the qualitative analysis of the QUARC® controller developed in D.2.

R.4 Based on D.6, add the mathematical procedure to obtain the QUBE-Servo 3 closed-loop transfer function, $\Theta_m(s)/\Theta_d(s)$. Additionally, according to D.7, show how to get the mathematical expressions of the proportional K_p and derivative K_v gains in terms of the system's parameters ω_n and ζ.

R.5 According to D.8 and D.9, show the Matlab® Script generated where the system parameters are defined, and the proportional K_p and derivative K_v gains are computed to satisfy the system requirements, $\%MP = 2.5\ \%$ and $t_p = 0.15$ [sec].

R.6 Based on D.10 and D.11, attach the position response as well as the motor voltage used under the PV controller designed. Do they match the desired percent Overshoot and Peak Time specifications required in D.9 without saturating the motor (going beyond ±10 V)?

*__Hint:__ Support your response graphically.

R.7 Show the tunning procedure of your control gains K_p and K_v performed in D.12 to satisfy the system's requirements.

R.8 What could you observe with the PD controller implemented in D.13?

*__Hint:__ Add a scope before the saturation block.

R.9 Show the Simulink model developed in D.14 where the reference is set by reading the angle position of a second QUBE-Servo 3.

R.10 Conclusions.